MT-2

Clean Water Applications

- 2" NPT Brass Screw Plug
- Copper Sheath Elements
- High Watt Density (46 - 53 W/In²)
- 1.5 - 15 kW
- Without Thermostat
- 120, 208, 240 and 480 Volt, Single Phase
- General Purpose, Moisture Resistant/Explosion Resistant Terminal Enclosure or Moisture Resistant

E1 —Dimensions (Inches)

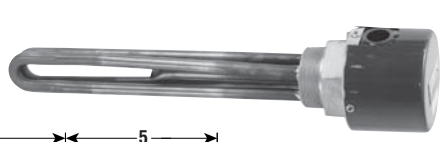

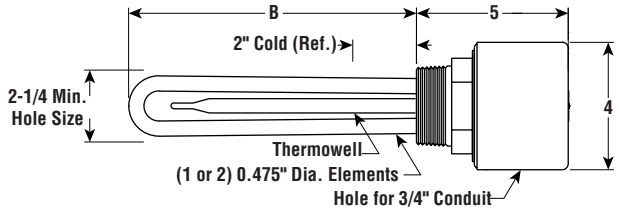

NRTL /C

E2 — Dimensions (Inches)

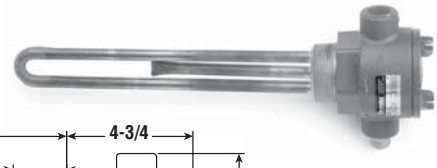

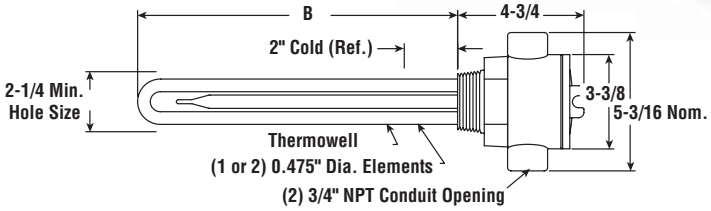

E4TP — Dimensions (Inches)

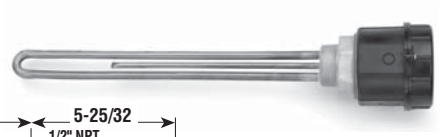

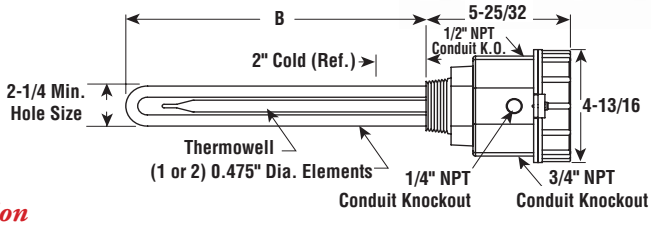

FASTShip™

Same-day shipping on stock item orders received before 4 pm CST.
3-day shipping on assembly-stock items.

Specifications and Ordering Information

						E1 General Purpose[1]				E2 Moisture Resistant/ Explosion Resistant[2]				E4 Moisture Resistant			
kW	Volts	Phase	W/In²	No. Elem.	DIM B (In.)	Model	Stock	PCN	Wt. (Lbs.)	Model	Stock	PCN	Wt. (Lbs.)	Model	Stock	PCN	Wt. (Lbs.)
1.5	120	1	48	1	12	**MT-215A**	**S**	**139459**	3	MT-215E2	AS	288243	6	MT-215E4TP	AS	062164	3
1.5	208	1	48	1	12	MT-215A	AS	295275	3	MT-215E2	AS	295283	6	MT-215E4TP	AS	062172	3
1.5	240	1	48	1	12	MT-215A	AS	139467	3	MT-215E2	AS	288251	6	MT-215E4TP	AS	062180	3
1.5	480	1	48	1	12	**MT-215A**	**S**	**139475**	3	MT-215E2	AS	295005	6	MT-215E4TP	AS	062199	3
2	120	1	48	1	18	**MT-220A**	**S**	**139483**	3	MT-220E2	AS	295013	6	MT-220E4TP	AS	062244	3
2	208	1	48	1	18	MT-220A	AS	295021	3	MT-220E2	AS	295030	6	MT-220E4TP	AS	062252	3
2	240	1	48	1	18	**MT-220A**	**S**	**139491**	3	MT-220E2	AS	295048	6	MT-220E4TP	AS	062260	3
2	480	1	48	1	18	**MT-220A**	**S**	**139504**	3	MT-220E2	AS	295056	6	MT-220E4TP	AS	062279	3
2	120	1	51	2	8	MT-220-3A	AS	139512	3	MT-220-3E2	AS	288260	6	MT-220-3E4TP	AS	062201	3
2	208	1	51	2	8	MT-220-3A	AS	295064	3	MT-220-3E2	AS	295072	6	MT-220-3E4TP	AS	062210	3
2	240	1	51	2	8	MT-220-3A	AS	139520	3	MT-220-3E2	AS	288278	6	MT-220-3E4TP	AS	062228	3
2	480	1	51	2	8	MT-220-3A	AS	139539	3	MT-220-3E2	AS	288286	6	MT-220-3E4TP	AS	062236	3
2.5	120	1	48	2	9-1/2	MT-225A	AS	139547	3	MT-225E2	AS	295080	6	MT-225E4TP	AS	062287	3
2.5	208	1	48	2	9-1/2	MT-225A	AS	295099	3	MT-225E2	AS	295101	6	MT-225E4TP	AS	062295	3
2.5	240	1	48	2	9-1/2	**MT-225A**	**S**	**139555**	3	MT-225E2	AS	288294	6	MT-225E4TP	AS	062308	3
2.5	480	1	48	2	9-1/2	MT-225A	AS	139563	3	MT-225E2	AS	288307	6	MT-225E4TP	AS	062316	3
3	120	1	48	2	12	**MT-230A**	**S**	**139571**	4	MT-230E2	AS	288315	7	MT-230E4TP	AS	062324	4
3	208	1	48	2	12	MT-230A	AS	295110	4	MT-230E2	AS	295128	7	MT-230E4TP	AS	062332	4
3	240	1	48	2	12	**MT-230A**	**S**	**139580**	4	**MT-230E2**	**S**	**288323**	7	MT-230E4TP	AS	062340	4
3	480	1	48	2	12	MT-230A	AS	139598	4	MT-230E2	AS	288331	7	MT-230E4TP	AS	062359	4
4	120	1	48	2	18	MT-240A	AS	139600	4	—	—	——	—	—	—		4
4	208	1	48	2	18	MT-240A	AS	295136	4	MT-240E2	AS	295144	7	MT-240E4TP	AS	062375	4
4	240	1	48	2	18	MT-240A	AS	139619	4	MT-240E2	AS	288340	7	MT-240E4TP	AS	062383	4
4	480	1	48	2	18	**MT-240A**	**S**	**139627**	4	**MT-240E2**	**S**	**288358**	7	MT-240E4TP	AS	062391	4
5	120	1	53	2	19-13/16	MT-250A	AS	139635	5	—	—	—	—	—	—		5
5	208	1	53	2	19-13/16	MT-250A	AS	295152	5	MT-250E2	AS	295160	8	MT-250E4TP	AS	062412	5
5	240	1	53	2	19-13/16	**MT-250A**	**S**	**139643**	5	MT-250E2	AS	288366	8	MT-250E4TP	AS	062420	5
5	480	1	53	2	19-13/16	**MT-250A**	**S**	**139651**	5	**MT-250E2**	**S**	**288374**	8	MT-250E4TP	AS	062439	5

MT-2

Clean Water Applications *(cont'd.)*

- **2" NPT Brass Screw Plug**
- **Copper Sheath Elements**
- **High Watt Density (46 - 53 W/In²)**
- **1.5 - 15 kW**
- **Without Thermostat**
- **120, 208, 240 and 480 Volt, Single Phase**
- **General Purpose, Moisture Resistant/Explosion Resistant Terminal Enclosure or Moisture Resistant**

NRTL /C

E1 — Dimensions (Inches)

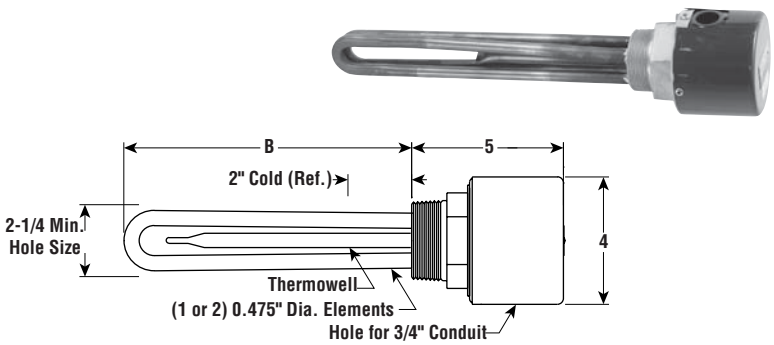

E2 — Dimensions (Inches)

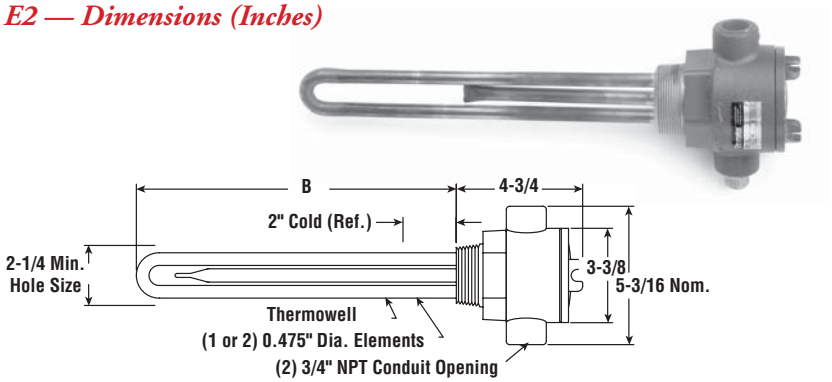

E4TP — Dimensions (Inches)

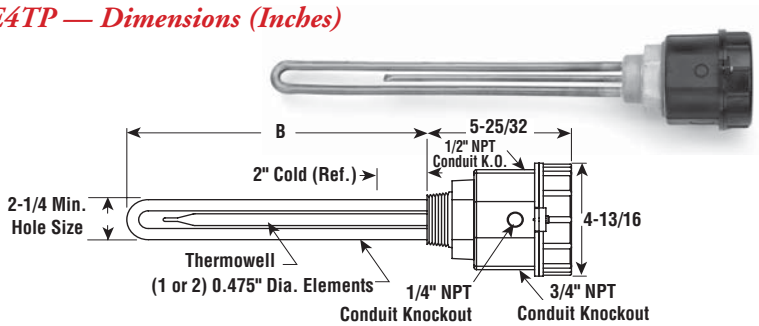

Specifications and Ordering Information

						E1 General Purpose[1]				E2 Moisture Resistant/Explosion Resistant[2]				E4 Moisture Resistant			
kW	Volts	Phase	W/In²	No. Elem.	DIM B (In.)	Model	Stock	PCN	Wt. (Lbs.)	Model	Stock	PCN	Wt. (Lbs.)	Model	Stock	PCN	Wt. (Lbs.)
6	208	1	47	2	25-1/8	MT-260A	AS	295179	5	MT-260E2	AS	295187	8	MT-260E4TP	AS	062447	5
6	240	1	47	2	25-1/8	**MT-260A**	**S**	**139660**	5	MT-260E2	AS	288382	8	MT-260E4TP	AS	062455	5
6	480	1	47	2	25-1/8	**MT-260A**	**S**	**139678**	5	MT-260E2	AS	288390	8	MT-260E4TP	AS	062463	5
7	240	1	49	2	28	**MT-270A**	**S**	**139686**	6	MT-270E2	AS	288403	9	MT-270E4TP	AS	062471	6
7	480	1	49	2	28	**MT-270A**	**S**	**139694**	6	**MT-270E2**	**S**	**288411**	9	MT-270E4TP	AS	062480	6
10	208	1	46	2	40-1/2	MT-2100A	AS	295195	7	MT-2100E2	AS	295208	10	MT-2100E4TP	AS	062084	7
10	240	1	46	2	40-1/2	**MT-2100A**	**S**	**139707**	7	MT-2100E2	AS	288420	10	MT-2100E4TP	AS	062092	7
10	480	1	46	2	40-1/2	**MT-2100A**	**S**	**139715**	7	MT-2100E2	AS	288438	10	MT-2100E4TP	AS	062105	7
12	208	1	46	2	48	MT-2120A*	AS	295216	8	MT-2120E2*	AS	295224	11	MT-2120E4TP*	AS	062113	8
12	240	1	46	2	48	MT-2120A*	AS	295232	8	MT-2120E2*	AS	295240	11	MT-2120E4TP*	AS	062121	8
12	480	1	46	2	48	MT-2120A	AS	295259	8	MT-2120E2	AS	295267	11	MT-2120E4TP	AS	062130	8
15	240	1	50	2	54	MT-2150A*	NS	295312	9	MT-2150E2*	NS	295339	12	MT-2150E4TP*	AS	062148	9
15	480	1	50	2	54	MT-2150A	NS	295320	9	MT-2150E2	NS	295347	12	MT-2150E4TP	AS	062156	9

Stock Status: **S** = stock AS = assembly stock NS = non-stock
To Order—Specify model, volts, phase, kW, PCN and quantity.

1. Heaters with General Purpose Enclosures are UL Listed and CSA Certified except Models with *(Exceeds 48 Amps).
2. Heaters with Moisture Resistant/Explosion Resistant Enclosures are CSA NRTL/C Certified except Models with *(Exceeds 48 Amps).

FASTShip™
Same-day shipping on stock item orders received before 4 pm CST.
3-day shipping on assembly-stock items.