GSV3 & GTV3

L-Shaped Vertical Stacked Metal Tube Heaters

- **316 Stainless Steel and Titanium Sheath Tubes**
- **20 and 40 W/In²**
- **3 - 36 kW**
- **240 and 480 Volt, Three Phase**
- **Moisture Resistant Terminal Enclosure**

Dimensions (Inches)

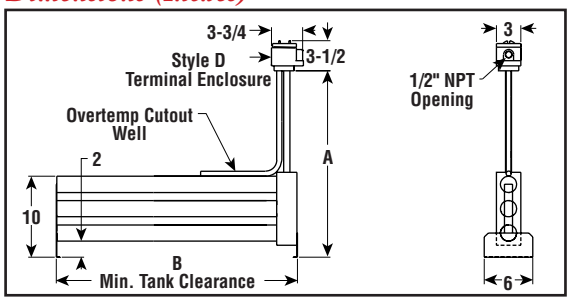

Features

- Moisture Resistant Terminal Enclosure
- Bottom Mounted L-Shaped Construction
- Single Use Overtemperature Protection Thermal Fuse Supplied as Standard, for Process Temperatures up to 180˚F (82˚C)/ Fuse Temperature 219˚F (104˚C) Limit. For Higher Process/Fuse Temperature Limits, Consult Factory. Field Replaceable
- Resettable Overtemperature Protection Thermal Fuses also Available
- Steel, 304SS and Other Sheath Materials and Configurations available
- Optional Riser Heights available

Specifications and Ordering Information

kW	Volts	W/In²	Phase	Dimensions (In.) A	Dimensions (In.) B	316SS Model	316SS PCN	Titanium Model	Titanium PCN	Stock	Wt. (Lbs.)
GSV3 and GTV3 — 40 W/In²											
3	240	40	3	15	13	GSV3-32	052572	GTV3-32	052898	NS	25
3	480	40	3	15	13	GSV3-34	052580	GTV3-34	052900	NS	25
6	240	40	3	37	17	GSV3-62	052599	GTV3-62	052919	NS	29
6	480	40	3	37	17	GSV3-64	052601	GTV3-64	052927	NS	29
9	240	40	3	37	22	GSV3-92	052610	GTV3-92	052935	NS	35
9	480	40	3	37	22	GSV3-94	052628	GTV3-94	052943	NS	35
12	240	40	3	37	26	GSV3-122	052636	GTV3-122	052951	NS	43
12	480	40	3	37	26	GSV3-124	052644	GTV3-124	052960	NS	43
15	240	40	3	50	31	GSV3-152	052652	GTV3-152	052978	NS	50
15	480	40	3	50	31	GSV3-154	052660	GTV3-154	052986	NS	50
18	240	40	3	50	36	GSV3-182	052679	GTV3-182	052994	NS	58
18	480	40	3	50	36	GSV3-184	052687	GTV3-184	053006	NS	58
24	240	40	3	50	44	GSV3-242	052695	GTV3-242	053014	NS	69
24	480	40	3	50	44	GSV3-244	052708	GTV3-244	053022	NS	69
27	240	40	3	50	50	GSV3-272	052716	GTV3-272	053030	NS	76
27	480	40	3	50	50	GSV3-274	052724	GTV3-274	053049	NS	76
30	240	40	3	50	55	GSV3-302	052732	GTV3-302	053057	NS	83
30	480	40	3	50	55	GSV3-304	052740	GTV3-304	053065	NS	83
36	240	40	3	50	64	GSV3-362	052759	GTV3-362	053073	NS	94
36	480	40	3	50	64	GSV3-364	052767	GTV3-364	053081	NS	94
GDSV3 and GDTV3 — 20 W/In²											
3	240	20	3	15	17	GDSV3-32	052775	GDTV3-32	053090	NS	29
3	480	20	3	15	17	GDSV3-34	052783	GDTV3-34	053102	NS	29
6	240	20	3	37	26	GDSV3-62	052791	GDTV3-62	053110	NS	43
6	480	20	3	37	26	GDSV3-64	052804	GDTV3-64	053129	NS	43
9	240	20	3	50	36	GDSV3-92	052812	GDTV3-92	053137	NS	58
9	480	20	3	50	36	GDSV3-94	052820	GDTV3-94	053145	NS	58
12	240	20	3	50	44	GDSV3-122	052839	GDTV3-122	053153	NS	69
12	480	20	3	50	44	GDSV3-124	052847	GDTV3-124	053161	NS	69
15	240	20	3	50	55	GDSV3-152	052855	GDTV3-152	053170	NS	83
15	480	20	3	50	55	GDSV3-154	052863	GDTV3-154	053188	NS	83
18	240	20	3	50	64	GDSV3-182	052871	GDTV3-182	053196	NS	94
18	480	20	3	50	64	GDSV3-184	052880	GDTV3-184	053209	NS	94

Stock Status: **S** = stock AS = assembly stock NS = non-stock
To Order—Specify model, PCN, kW, volts, phase and quantity.