QM & QM3

Side Mount Quartz Tube Heaters

QM — Single Unit

- **INCOLOY® Sheath Elements Enclosed in Quartz Tube**
- **25 W/In²**
- **1 - 10 kW**
- **120, 240 and 480 Volt, 1 or 3 Phase**
- **Moisture Resistant Terminal Enclosure**

QM3 — Triple Units

- **INCOLOY® Sheath Elements Enclosed in Quartz Tube**
- **25 W/In²**
- **3 - 30 kW**
- **120, 240 and 480 Volt, 1 or 3 Phase**
- **Moisture Resistant Terminal Enclosure**

Features

- Moisture Resistant Terminal Enclosure
- Side Mounted Construction with Mounting Flange (Guard required for tank mounting)
- Single Use Overtemperature Protection Thermal Fuse Supplied as Standard, for Process Temperatures up to 180˚F (82˚C)/ Fuse Temperature 219˚F (104˚C) Limit. For Higher Process/Fuse Temperature Limits, Consult Factory. Field Replaceable
- Resettable Overtemperature Protection Thermal Fuses also Available
- Polypropylene Guard (order separately) (Only one guard required for all three heaters for QM3 only)
- 1 or 3 Phase field wired. Each heater supplied with conduit (QM3 only)
- Custom Heights and Other Configurations available

QM — Dimensions (Inches)

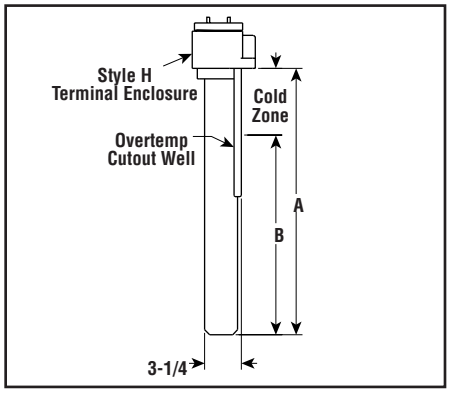

QM3 — Dimensions (Inches)

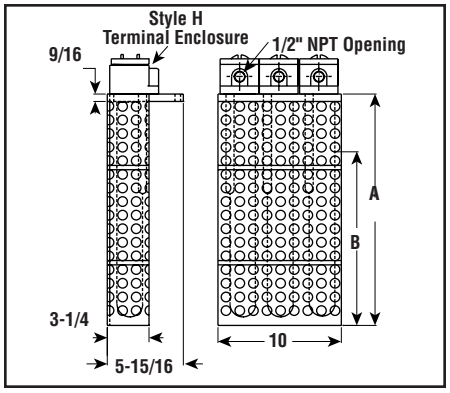

Specifications and Ordering Information

kW	Volts	W/In²	Phase	DIM (In.) A	DIM (In.) B	Quartz Model	Quartz Stock	Quartz PCN	Wt. (Lbs.)	Guard PCN
QM — Single Unit										
1	120	25	1	11	7	**QM-11**	**S**	**054973**	5	055132
1	240	25	1	11	7	QM-12	NS	054981	5	055132
2	240	25	1	17	12	QM-22	NS	054990	7	055140
2	480	25	1	17	12	**QM-24**	**S**	**055001**	7	055140
3	240	25	1	23	18	QM-32	NS	055010	9	055159
3	480	25	1	23	18	QM-34	NS	055028	9	055159
4	240	25	1	35	28	**QM-42**	**S**	**055036**	13	055167
4	480	25	1	35	28	QM-44	NS	055044	13	055167
5	240	25	1	41	33	QM-52	NS	055052	16	055175
5	480	25	1	41	33	QM-54	NS	055060	16	055175
6	240	25	1	47	39	QM-62	NS	055079	18	055183
6	480	25	1	47	39	QM-64	NS	055087	18	055183
8	240	25	1	59	49	QM-82	NS	055095	22	055191
8	480	25	1	59	49	QM-84	NS	055108	22	055191
10	240	25	1	71	62	QM-102	NS	055116	25	055204
10	480	25	1	71	62	QM-104	NS	055124	25	055204
QM3 — Three Units										
3	120	25	1	11	7	QM3-31	AS	055298	14	055458
3	240	25	1	11	7	QM3-32	NS	055300	14	055458
6	240	25	1	17	12	QM3-62	AS	055319	20	055466
6	480	25	1	17	12	QM3-64	NS	055327	20	055466
9	240	25	1	23	18	QM3-92	AS	055335	26	055474
9	480	25	1	23	18	QM3-94	AS	055343	26	055474
12	240	25	1	35	28	QM3-122	AS	055351	38	055482
12	480	25	1	35	28	QM3-124	NS	055360	38	055482
15	240	25	1	41	33	QM3-152	NS	055378	47	055490
15	480	25	1	41	33	QM3-154	NS	055386	47	055490
18	240	25	1	47	39	QM3-182	NS	055394	51	055503
18	480	25	1	47	39	QM3-184	AS	055407	51	055503
24	240	25	1	59	49	QM3-242	NS	055415	60	055511
24	480	25	1	59	49	QM3-244	NS	055423	60	055511
30	240	25	1	71	62	QM3-302	NS	055431	70	055520
30	480	25	1	71	62	QM3-304	NS	055440	70	055520

Stock Status: **S** = stock AS = assembly stock NS = non-stock
To Order—Specify model, PCN, kW, volts, phase and quantity.
Notes —
A. Individual single phase heaters can be field wired for three phase.
B. Guard (not shown), required for tank mounting. Order separately by PCN.
C. Elements, quartz tube and guard shipped separately.