MTS-2

Process Water Applications

- 2" NPT Stainless Steel Passivated Screw Plug
- Stainless Steel Passivated Sheath Elements
- High Watt Density (43 - 51 W/In²)
- 1.5 - 15 kW
- Without Thermostat
- 120, 208, 240 and 480 Volt, Single Phase
- General Purpose, Moisture Resistant/Explosion Resistant Terminal Enclosure or Moisture Resistant

E1 — Dimensions (Inches)

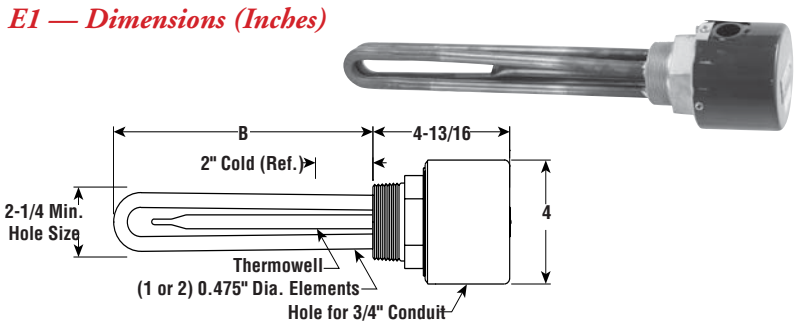

E2 — Dimensions (Inches)

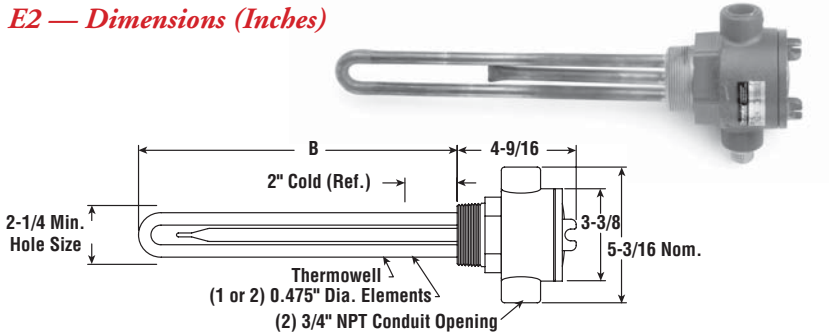

E4TP — Dimensions (Inches)

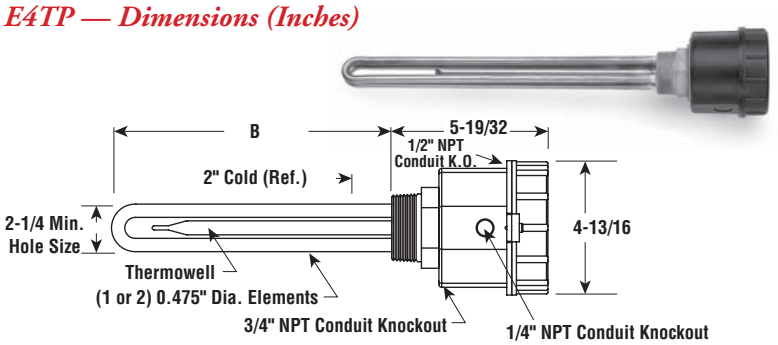

FASTShip™

Same-day shipping on stock item orders received before 4 pm CST.
3-day shipping on assembly-stock items.

Specifications and Ordering Information

						E1 General Purpose[1]				E2 Moisture Resistant/Explosion Resistant[2]				E4 Moisture Resistant			
kW	Volts	Phase	W/In²	No. Elem.	DIM B (In.)	Model	Stock	PCN	Wt. (Lbs.)	Model	Stock	PCN	Wt. (Lbs.)	Model	Stock	PCN	Wt. (Lbs.)
1.5	120	1	48	1	11-7/16	MTS-215A	AS	139942	3	MTS-215E2	AS	289502	6	MTS-215E4TP	AS	063378	3
1.5	208	1	48	1	11-7/16	MTS-215A	AS	186503	3	MTS-215E2	AS	186511	6	MTS-215E4TP	AS	063386	3
1.5	240	1	48	1	11-7/16	MTS-215A	AS	139950	3	MTS-215E2	AS	289510	6	MTS-215E4TP	AS	063394	3
1.5	480	1	48	1	11-7/16	MTS-215A	AS	139969	3	MTS-215E2	AS	186520	6	MTS-215E4TP	AS	063407	3
2	120	1	48	1	17-1/2	MTS-220A	AS	139977	4	MTS-220E2	AS	186538	7	MTS-220E4TP	AS	063415	4
2	208	1	48	1	17-1/2	MTS-220A	AS	186546	4	MTS-220E2	AS	186554	7	MTS-220E4TP	AS	063423	4
2	240	1	48	1	17-1/2	MTS-220A	AS	139985	4	MTS-220E2	AS	289529	7	MTS-220E4TP	AS	063431	4
2	480	1	48	1	17-1/2	MTS-220A	AS	139993	4	MTS-220E2	AS	186562	7	MTS-220E4TP	AS	063440	4
2	120	1	51	2	7-1/2	MTS-220-3A	AS	190019	4	MTS-220-3E2	AS	289537	7	MTS-220-3E4TP	AS	063458	4
2	208	1	51	2	7-1/2	MTS-220-3A	AS	186570	4	MTS-220-3E2	AS	186589	7	MTS-220-3E4TP	AS	063466	4
2	240	1	51	2	7-1/2	MTS-220-3A	AS	190027	4	MTS-220-3E2	AS	289545	7	MTS-220-3E4TP	AS	063474	4
2	480	1	51	2	7-1/2	MTS-220-3A	AS	190035	4	MTS-220-3E2	AS	289553	7	MTS-220-3E4TP	AS	063482	4
2.5	120	1	47	2	9	MTS-225A	AS	190043	4	MTS-225E2	AS	186597	7	MTS-225E4TP	AS	063490	4
2.5	240	1	47	2	9	**MTS-225A**	**S**	**190051**	4	MTS-225E2	AS	289561	7	MTS-225E4TP	AS	063503	4
2.5	480	1	47	2	9	MTS-225A	AS	190060	4	MTS-225E2	AS	289570	7	MTS-225E4TP	AS	063511	4
3	120	1	43	2	11-1/2	MTS-230A	AS	190078	5	MTS-230E2	AS	186600	8	MTS-230E4TP	AS	063520	5
3	208	1	43	2	11-1/2	MTS-230A	AS	186618	5	MTS-230E2	AS	186626	8	MTS-230E4TP	AS	063538	5
3	240	1	43	2	11-1/2	**MTS-230A**	**S**	**190086**	5	MTS-230E2	AS	289588	8	MTS-230E4TP	AS	063546	5
3	480	1	43	2	11-1/2	**MTS-230A**	**S**	**190094**	5	MTS-230E2	AS	289596	8	MTS-230E4TP	AS	063554	5
4	120	1	44	2	17-1/2	MTS-240A	AS	190107	5	MTS-240E2	AS	186634	8	MTS-240E4TP	AS	063562	5
4	208	1	44	2	17-1/2	MTS-240A	AS	186642	5	MTS-240E2	AS	186650	8	MTS-240E4TP	AS	063570	5
4	240	1	44	2	17-1/2	**MTS-240A**	**S**	**190115**	5	MTS-240E2	AS	289609	8	MTS-240E4TP	AS	063589	5
4	480	1	44	2	17-1/2	**MTS-240A**	**S**	**190123**	5	MTS-240E2	AS	289617	8	MTS-240E4TP	AS	063597	5
5	120	1	45	2	19	MTS-250A	AS	190131	5	MTS-250E2	NS	186669	8	MTS-250E4TP	AS	063600	5
5	208	1	45	2	19	MTS-250A	AS	186677	5	MTS-250E2	AS	186685	8	MTS-250E4TP	AS	063618	5
5	240	1	45	2	19	**MTS-250A**	**S**	**190140**	5	MTS-250E2	AS	289625	8	MTS-250E4TP	AS	063626	5
5	480	1	45	2	19	MTS-250A	AS	190158	5	MTS-250E2	AS	289633	8	MTS-250E4TP	AS	063634	5

MTS-2

Process Water Applications *(cont'd.)*

- **2" NPT Stainless Steel Passivated Screw Plug**
- **Stainless Steel Passivated Sheath Elements**
- **High Watt Density (43 - 51 W/In²)**
- **1.5 - 15 kW**
- **Without Thermostat**
- **208, 240 and 480 Volt, Single Phase**
- **General Purpose or Moisture Resistant/Explosion Resistant Terminal Enclosure or Moisture Resistant**

E1 — Dimensions (Inches)

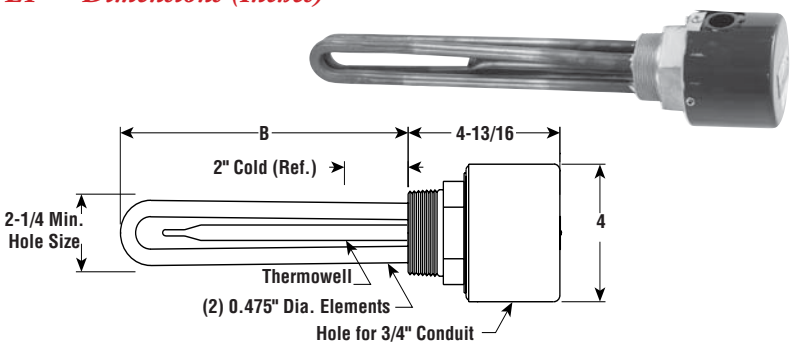

NRTL/C

E2 — Dimensions (Inches)

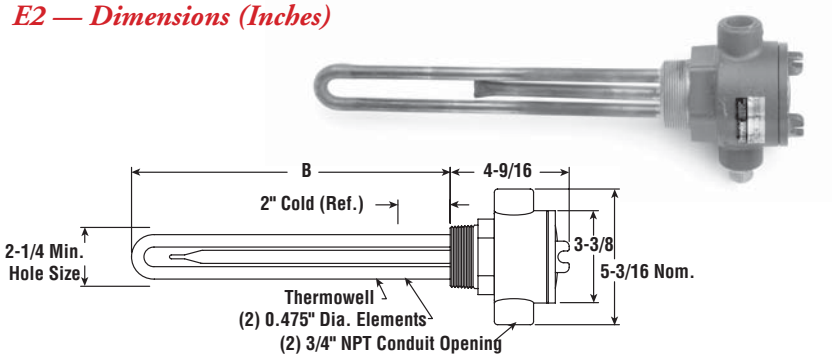

E4TP — Dimensions (Inches)

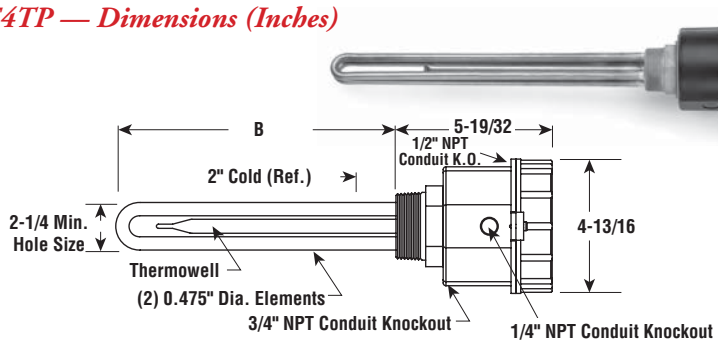

Specifications and Ordering Information

						E1 General Purpose[1]				E2 Moisture Resistant/ Explosion Resistant[2]				E4 Moisture Resistant			
kW	Volts	Phase	W/In²	No. Elem.	DIM B (In.)	Model	Stock	PCN	Wt. (Lbs.)	Model	Stock	PCN	Wt. (Lbs.)	Model	Stock	PCN	Wt. (Lbs.)
6	208	1	46	2	24-1/2	MTS-260A	AS	186693	5	MTS-260E2	AS	186706	8	MTS-260E4TP	AS	063642	5
6	240	1	46	2	24-1/2	**MTS-260A**	**S**	**190166**	5	MTS-260E2	AS	289641	8	MTS-260E4TP	AS	063650	5
6	480	1	46	2	24-1/2	**MTS-260A**	**S**	**190174**	5	MTS-260E2	AS	289650	8	MTS-260E4TP	AS	063669	5
7	240	1	46	2	27-1/2	**MTS-270A**	**S**	**190182**	6	MTS-270E2	AS	289676	9	MTS-270E4TP	AS	063677	6
7	480	1	46	2	27-1/2	MTS-270A	AS	190190	6	MTS-270E2	AS	289684	9	MTS-270E4TP	AS	063685	6
10	208	1	46	2	40	MTS-2100A	AS	186714	8	MTS-2100E2	AS	186722	11	MTS-2100E4TP	AS	063298	8
10	240	1	46	2	40	MTS-2100A	AS	190203	8	MTS-2100E2	AS	289692	11	MTS-2100E4TP	AS	063300	8
10	480	1	46	2	40	MTS-2100A	AS	190211	8	MTS-2100E2	AS	289705	11	MTS-2100E4TP	AS	063319	8
12	208	1	46	2	48	MTS-2120A*	AS	186730	8	MTS-2120E2*	AS	186749	11	MTS-2120E4TP*	AS	063327	8
12	240	1	46	2	48	MTS-2120A*	AS	190220	8	MTS-2120E2*	AS	289713	11	MTS-2120E4TP*	AS	063335	8
12	480	1	46	2	48	MTS-2120A	AS	190238	8	MTS-2120E2	AS	289721	11	MTS-2120E4TP	AS	063343	8
15	240	1	50	2	54	MTS-2150A*	AS	190246	8	MTS-2150E2*	AS	289730	11	MTS-2150E4TP*	AS	063351	8
15	480	1	50	2	54	MTS-2150A	AS	190254	8	MTS-2150E2	AS	289748	11	MTS-2150E4TP	AS	063360	8

Stock Status: **S** = stock AS = assembly stock NS = non-stock
To Order—Specify model, volts, phase, kW, PCN and quantity.

1. Heaters with General Purpose Enclosures are UL Listed and CSA Certified except Models with *(Exceeds 48 Amps).
2. Heaters with Moisture Resistant/Explosion Resistant Enclosures are CSA NRTL/C Certified except Models with *(Exceeds 48 Amps).

FASTShip™
Same-day shipping on stock item orders received before 4 pm CST.
3-day shipping on assembly-stock items.