MTO-1

Light Weight Oil Applications

- 1-1/4" NPT Steel Screw Plug
- Steel Sheath Elements
- 10 and 20 W/In²
- 0.5 - 3 kW
- Without Thermostat
- 120 and 240 Volt, Single Phase
- General Purpose, Moisture Resistant/Explosion Resistant Terminal Enclosure or Moisture Resistant

NRTL /C

SCREW PLUG

E1 — Dimensions (Inches)

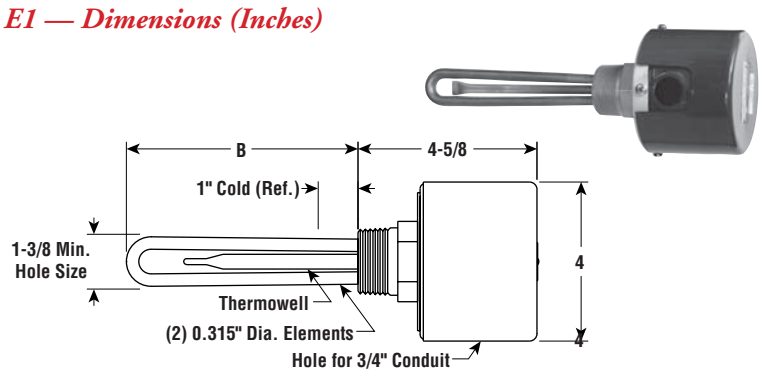

E2 — Dimensions (Inches)

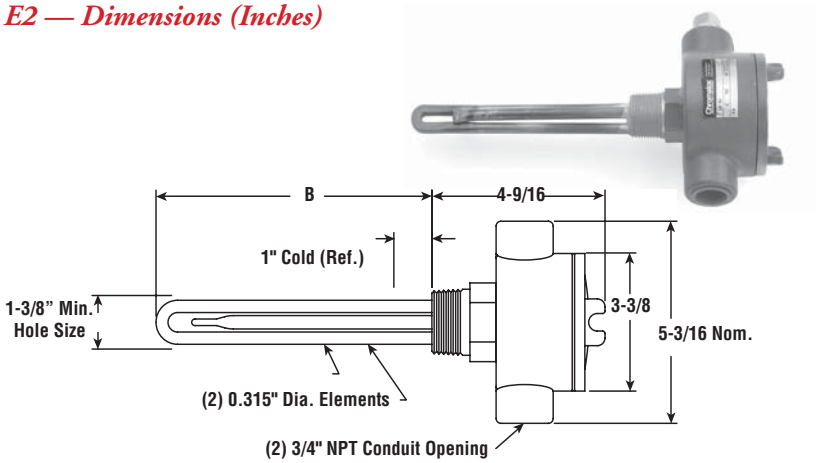

E4TP — Dimensions (Inches)

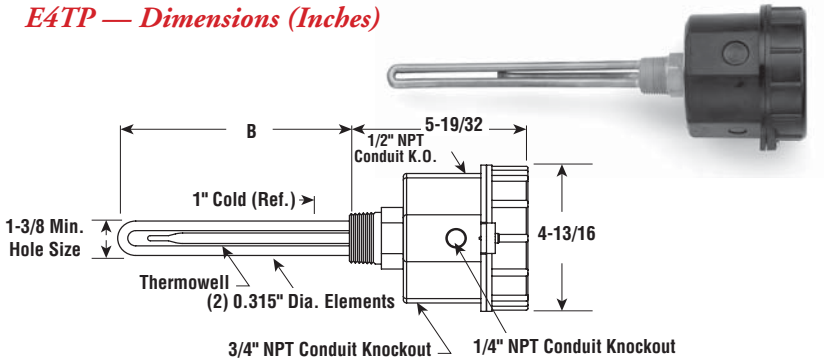

Specifications and Ordering Information

						E1 General Purpose[1]				E2 Moisture Resistant/ Explosion Resistant[2]				E4 Moisture Resistant			
kW	Volts	Phase	W/In²	No. Elem.	DIM B (In.)	Model	Stock	PCN	Wt. (Lbs.)	Model	Stock	PCN	Wt. (Lbs.)	Model	Stock	PCN	Wt. (Lbs.)
0.5	120	1	10	2	12-1/2	MTO-105	AS	326385	2	MTO-105E2	AS	257383	5	MTO-105E4TP	AS	060513	8
0.5	240	1	10	2	12-1/2	MTO-105	AS	326393	2	MTO-105E2	AS	326406	5	MTO-105E4TP	AS	060521	8
1	120	1	20	2	12-1/2	**MTO-110A**	**S**	**139723**	2	**MTO-110AE2**	**S**	**288497**	5	MTO-110AE4TP	AS	060530	8
1	240	1	20	2	12-1/2	**MTO-110A**	**S**	**139731**	2	MTO-110AE2	AS	288500	5	MTO-110AE4TP	AS	060548	8
2	120	1	20	2	26	MTO-120	AS	038148	3	MTO-120E2	AS	038180	6	MTO-120E4TP	AS	060556	9
2	240	1	20	2	26	MTO-120	AS	038156	3	MTO-120E2	AS	038199	6	MTO-120E4TP	AS	060564	9
3	120	1	20	2	38	MTO-130	AS	038164	3	MTO-130E2	AS	038201	6	MTO-130E4TP	AS	060572	9
3	240	1	20	2	38	MTO-130	AS	038172	3	MTO-130E2	AS	038210	6	MTO-130E4TP	AS	060580	9

Stock Status: **S** = stock AS = assembly stock NS = non-stock
To Order—Specify model, volts, phase, kW, PCN and quantity.

1. Heaters with General Purpose Enclosures are UL Recognized and CSA Certified.
2. Heaters with Moisture Resistant/Explosion Resistant Enclosures are CSA NRTL/C Certified.

FASTShip™
Same-day shipping on stock item orders received before 4 pm CST.
3-day shipping on assembly-stock items.