MT-3

Clean Water Applications

- 2-1/2" NPT Brass Screw Plug
- Copper Sheath Elements
- High Watt Density (46 - 53 W/In²)
- 3 - 18 kW
- Without Thermostat
- 120, 208, 240 and 480 Volt, 1 and 3 Phase
- General Purpose, Moisture Resistant/Explosion Resistant Terminal Enclosure or Moisture Resistant

FASTShip

Same-day shipping on stock item orders received before 4 pm CST.
3-day shipping on assembly-stock items.

E1 — Dimensions (Inches)

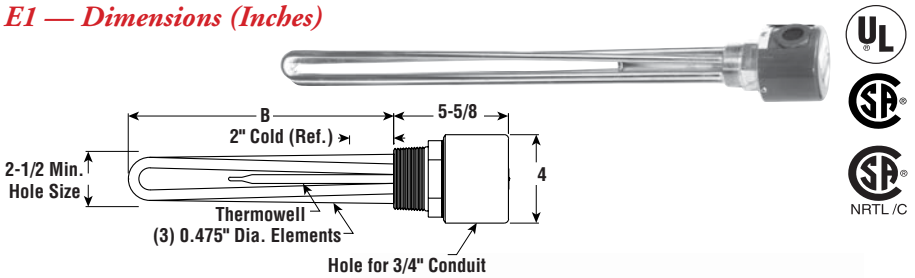

NRTL /C

E2 — Dimensions (Inches)

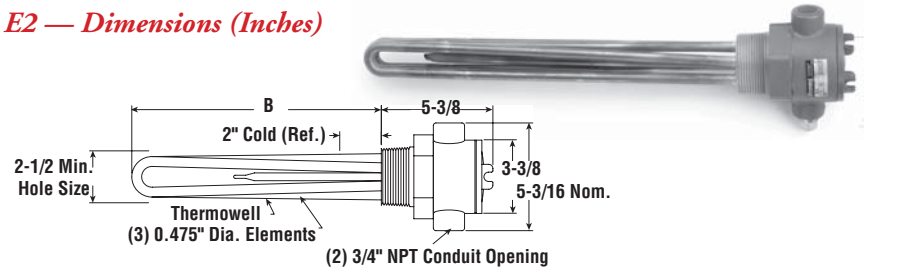

E4TP — Dimensions (Inches)

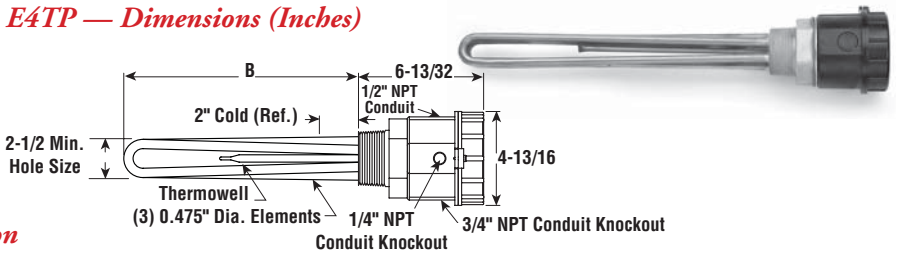

Specifications and Ordering Information

						E1 General Purpose[1]				E2 Moisture Resistant/ Explosion Resistant[2]				E4 Moisture Resistant			
kW	Volts	Phase	W/In²	No. Elem.	DIM B (In.)	Model	Stock	PCN	Wt. (Lbs.)	Model	Stock	PCN	Wt. (Lbs.)	Model	Stock	PCN	Wt. (Lbs.)
3	120	1	51	3	7-3/8	MT-330A	AS	191396	5	MT-330E2	AS	310800	8	MT-330E4TP	AS	063861	5
3	208	1	51	3	7-3/8	MT-330A	AS	322245	5	MT-330E2	AS	322253	8	MT-330E4TP	AS	063870	5
3	208	3	51	3	7-3/8	MT-330A	AS	322261	5	MT-330E2	AS	322270	8	MT-330E4TP	AS	063888	5
3	240	1	51	3	7-3/8	MT-330A	AS	191409	5	MT-330E2	AS	288809	8	MT-330E4TP	AS	063896	5
3	240	3	51	3	7-3/8	**MT-330A**	**S**	**191433**	5	MT-330E2	AS	288817	8	MT-330E4TP	AS	063909	5
3	480	1	51	3	7-3/8	MT-330A	AS	191417	5	MT-330E2	AS	310818	8	MT-330E4TP	AS	063917	5
3	480	3	51	3	7-3/8	**MT-330A**	**S**	**191441**	5	MT-330E2	AS	322288	8	MT-330E4TP	AS	063925	5
3.75	120	1	52	3	8-7/8	MT-337A	AS	191450	6	MT-337E2	AS	310826	9	MT-337E4TP	AS	063933	6
3.75	208	1	52	3	8-7/8	MT-337A	AS	322296	6	MT-337E2	AS	322309	9	MT-337E4TP	AS	063941	6
3.75	208	3	52	3	8-7/8	MT-337A	AS	322317	6	MT-337E2	AS	322325	9	MT-337E4TP	AS	063950	6
3.75	240	1	52	3	8-7/8	MT-337A	AS	191468	6	MT-337E2	AS	288825	9	MT-337E4TP	AS	063968	6
3.75	240	3	52	3	8-7/8	MT-337A	AS	191492	6	MT-337E2	AS	288833	9	MT-337E4TP	AS	063976	6
3.75	480	1	52	3	8-7/8	MT-337A	NS	191476	6	MT-337E2	NS	310834	9	MT-337E4TP	AS	063984	6
3.75	480	3	52	3	8-7/8	**MT-337A**	**S**	**191505**	6	MT-337E2	AS	322333	9	MT-337E4TP	AS	063992	6
4.5	120	1	48	3	11-3/8	MT-345A	AS	191513	6	MT-345E2	AS	310842	9	MT-345E4TP	AS	064004	6
4.5	208	1	48	3	11-3/8	MT-345A	AS	322341	6	MT-345E2	AS	322350	9	MT-345E4TP	AS	064012	6
4.5	208	3	48	3	11-3/8	MT-345A	AS	322368	6	MT-345E2	AS	322376	9	MT-345E4TP	AS	064020	6
4.5	240	1	48	3	11-3/8	**MT-345A**	**S**	**191521**	6	MT-345E2	AS	288841	9	MT-345E4TP	AS	064039	6
4.5	240	3	48	3	11-3/8	**MT-345A**	**S**	**191556**	6	MT-345E2	AS	288850	9	MT-345E4TP	AS	064047	6
4.5	480	1	48	3	11-3/8	MT-345A	AS	191530	6	MT-345E2	AS	288868	9	MT-345E4TP	AS	064055	6
4.5	480	3	48	3	11-3/8	**MT-345A**	**S**	**191564**	6	MT-345E2	AS	288876	9	MT-345E4TP	AS	064063	6
6	120	1	48	3	17-3/8	MT-360A	AS	191572	8	MT-360E2	AS	310850	11	MT-360E4TP	AS	064071	8
6	208	1	48	3	17-3/8	MT-360A	AS	322384	8	MT-360E2	AS	322392	11	MT-360E4TP	AS	064080	8
6	208	3	48	3	17-3/8	MT-360A	AS	322405	8	MT-360E2	AS	322413	11	MT-360E4TP	AS	064098	8
6	240	1	48	3	17-3/8	MT-360A	AS	191580	8	MT-360E2	AS	288884	11	MT-360E4TP	AS	064100	8
6	240	3	48	3	17-3/8	**MT-360A**	**S**	**191610**	8	MT-360E2	AS	288892	11	MT-360E4TP	AS	064119	8
6	480	1	48	3	17-3/8	MT-360A	AS	191599	8	MT-360E2	AS	288905	11	MT-360E4TP	AS	064127	8
6	480	3	48	3	17-3/8	**MT-360A**	**S**	**191628**	8	MT-360E2	AS	288913	11	MT-360E4TP	AS	064135	8
7.5	208	1	53	3	19-1/8	MT-375A	AS	322421	8	MT-375E2	AS	322430	11	MT-375E4TP	AS	064143	8
7.5	208	3	53	3	19-1/8	MT-375A	AS	322448	8	MT-375E2	AS	322456	11	MT-375E4TP	AS	064151	8
7.5	240	1	53	3	19-1/8	MT-375A	AS	191636	8	MT-375E2	AS	288921	11	MT-375E4TP	AS	064160	8
7.5	240	3	53	3	19-1/8	**MT-375A**	**S**	**191652**	8	MT-375E2	AS	288930	11	MT-375E4TP	AS	064178	8
7.5	480	1	53	3	19-1/8	MT-375A	AS	191644	8	MT-375E2	AS	288948	11	MT-375E4TP	AS	064186	8
7.5	480	3	53	3	19-1/8	**MT-375A**	**S**	**191660**	8	MT-375E2	AS	288956	11	MT-375E4TP	AS	064194	8
9	208	1	47	3	24-1/2	MT-390A	AS	322464	12	MT-390E2	AS	322472	15	MT-390E4TP	AS	064207	12
9	208	3	47	3	24-1/2	MT-390A	AS	322480	12	MT-390E2	AS	322499	15	MT-390E4TP	AS	064215	12
9	240	1	47	3	24-1/2	MT-390A	AS	191679	12	MT-390E2	AS	288964	15	MT-390E4TP	AS	064223	12
9	240	3	47	3	24-1/2	**MT-390A**	**S**	**191695**	12	MT-390E2	AS	288972	15	MT-390E4TP	AS	064231	12
9	480	1	47	3	24-1/2	MT-390A	AS	191687	12	MT-390E2	AS	288980	15	MT-390E4TP	AS	064240	12
9	480	3	47	3	24-1/2	**MT-390A**	**S**	**191708**	12	**MT-390E2**	**S**	**288999**	15	MT-390E4TP	AS	064258	12

MT-3

Clean Water Applications *(cont'd.)*

- **2-1/2" NPT Brass Screw Plug**
- **Copper Sheath Elements**
- **High Watt Density (46 - 53 W/In²)**
- **3 - 18 kW**
- **Without Thermostat**
- **120, 208 and 480 Volt, 1 and 3 Phase**
- **General Purpose, Moisture Resistant/Explosion Resistant Terminal Enclosure or Moisture Resistant**

E1 — Dimensions (Inches)

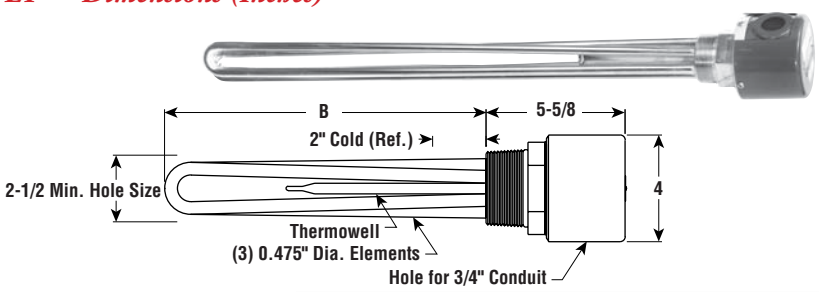

NRTL /C

E2 — Dimensions (Inches)

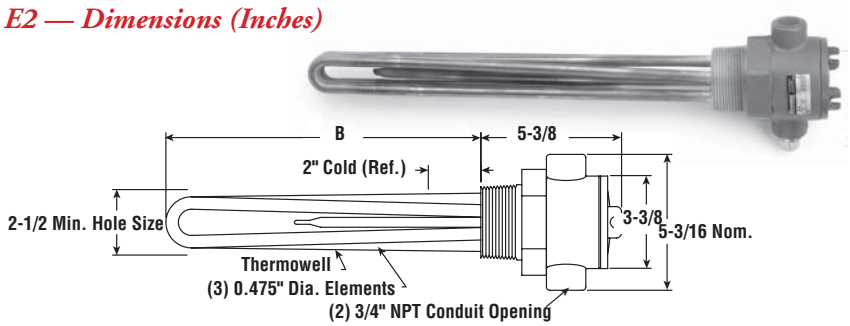

E4TP — Dimensions (Inches)

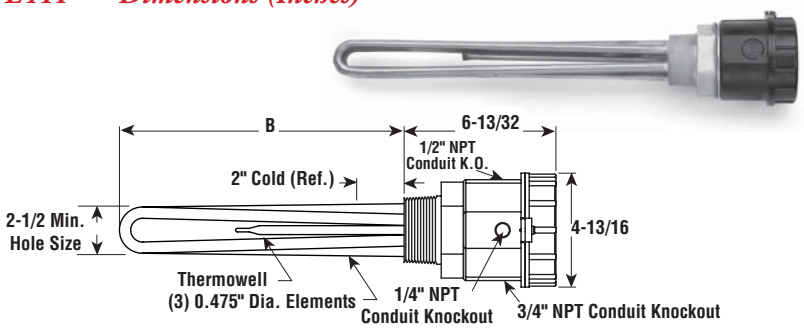

Specifications and Ordering Information

						E1 General Purpose[1]				E2 Moisture Resistant/Explosion Resistant[2]				E4 Moisture Resistant			
kW	Volts	Phase	W/In²	No. Elem.	DIM B (In.)	Model	Stock	PCN	Wt. (Lbs.)	Model	Stock	PCN	Wt. (Lbs.)	Model	Stock	PCN	Wt. (Lbs.)
12	208	1	46	3	32-5/16	MT-3120A	AS	322501	13	MT-3120E2	AS	322510	16	MT-3120E4TP	AS	063693	13
12	208	3	46	3	32-5/16	MT-3120A	AS	322528	13	MT-3120E2	AS	322536	16	MT-3120E4TP	AS	063706	13
12	240	1	46	3	32-5/16	MT-3120A	AS	322544	13	MT-3120E2	AS	322552	16	MT-3120E4TP	AS	063714	13
12	240	3	46	3	32-5/16	MT-3120A	AS	322560	13	MT-3120E2	AS	322579	16	MT-3120E4TP	AS	063722	13
12	480	1	46	3	32-5/16	MT-3120A	AS	322587	13	MT-3120E2	AS	322595	16	MT-3120E4TP	AS	063730	13
12	480	3	46	3	32-5/16	MT-3120A	AS	322608	13	MT-3120E2	AS	322616	16	MT-3120E4TP	AS	063749	13
15	208	1	46	3	39-3/4	MT-3150A	AS	322624	14	MT-3150E2	AS	322632	17	MT-3150E4TP	AS	063757	14
15	208	3	46	3	39-3/4	MT-3150A	AS	322640	14	MT-3150E2	AS	322659	17	MT-3150E4TP	AS	063765	14
15	240	1	46	3	39-3/4	MT-3150A	AS	322667	14	MT-3150E2	AS	322675	17	MT-3150E4TP	AS	063773	14
15	240	3	46	3	39-3/4	MT-3150A	AS	322683	14	MT-3150E2	AS	322691	17	MT-3150E4TP	AS	063781	14
15	480	1	46	3	39-3/4	MT-3150A	AS	322704	14	MT-3150E2	AS	322712	17	MT-3150E4TP	AS	063790	14
15	480	3	46	3	39-3/4	MT-3150A	AS	322720	14	MT-3150E2	AS	322739	17	MT-3150E4TP	AS	063802	14
18	208	3	46	3	47-1/4	MT-3180A	AS	322747	15	MT-3180E2	AS	322755	18	MT-3180E4TP	AS	063810	15
18	240	1	46	3	47-1/4	MT-3180A	AS	322763	15	MT-3180E2	AS	322771	18	MT-3180E4TP	AS	063829	15
18	240	3	46	3	47-1/4	MT-3180A	AS	322780	15	MT-3180E2	AS	322798	18	MT-3180E4TP	AS	063837	15
18	480	1	46	3	47-1/4	MT-3180A	AS	322800	15	MT-3180E2	AS	322819	18	MT-3180E4TP	AS	063845	15
18	480	3	46	3	47-1/4	MT-3180A	AS	322827	15	MT-3180E2	AS	322835	18	MT-3180E4TP	AS	063853	15

Stock Status: **S** = stock AS = assembly stock NS = non-stock
To Order—Specify model, volts, phase, kW, PCN and quantity.

1. Heaters with General Purpose Enclosures are UL Listed and CSA Certified.
2. Heaters with Moisture Resistant/Explosion Resistant Enclosures are CSA NRTL/C Certified.
3. Not UL Listed, CSA Certified or CSA NRTL/C Certified (Exceeds 48 Amps).

FASTShip™
Same-day shipping on stock item orders received before 4 pm CST.
3-day shipping on assembly-stock items.