# EMTI-3

## Mildly Corrosive Solution Applications

- 2" NPT Stainless Steel Screw Plug
- INCOLOY® Sheath Elements
- Medium Watt Density (23 W/In²)
- 3 - 9 kW
- Without Thermostat
- 240 and 480 Volt, Three Phase
- General Purpose, Moisture Resistant/Explosion Resistant Terminal Enclosure or Moisture Resistant

NRTL /C

SCREW PLUG

### *E1 — Dimensions (Inches)*

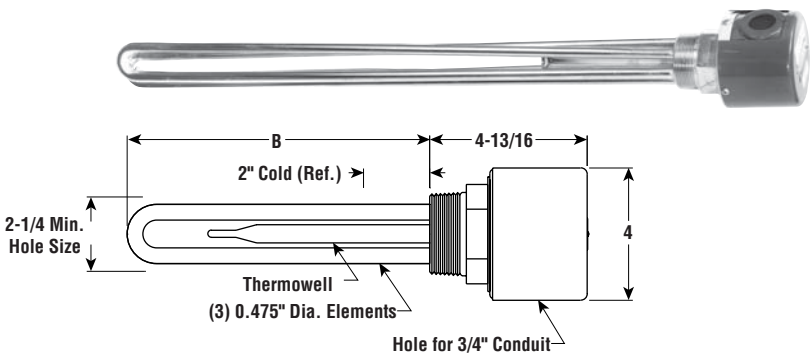


### *E2 — Dimensions (Inches)*

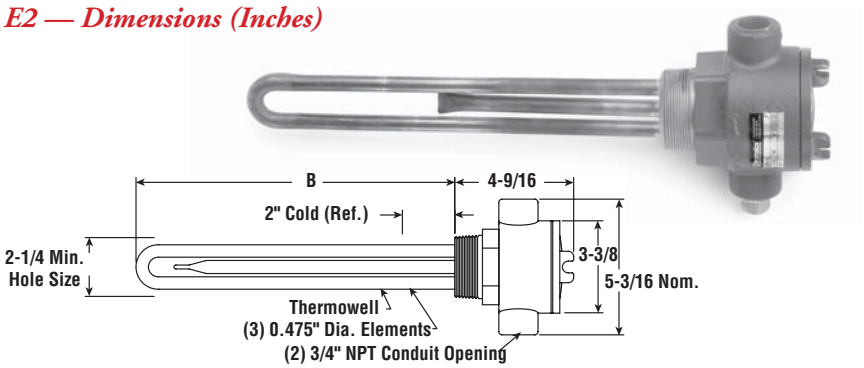


### *E4TP — Dimensions (Inches)*

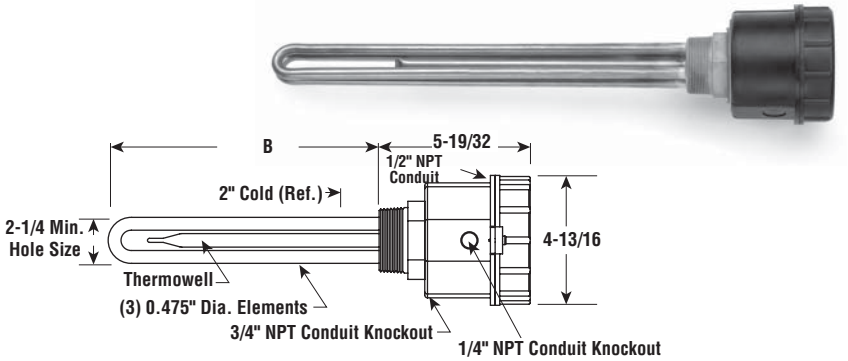


### *Specifications and Ordering Information*

| | | | | | | E1 General Purpose[1] | | | | E2 Moisture Resistant/ Explosion Resistant[2] | | | | E4 Moisture Resistant | | | |
|---|---|---|---|---|---|---|---|---|---|---|---|---|---|---|---|---|---|
| kW | Volts | Phase | W/In² | No. Elem. | DIM B (In.) | Model | Stock | PCN | Wt. (Lbs.) | Model | Stock | PCN | Wt. (Lbs.) | Model | Stock | PCN | Wt. (Lbs.) |
| 3 | 240 | 3 | 23 | 3 | 17-3/4 | EMTI-3030 | AS | 091889 | 6 | EMTI-3030E2 | AS | 033291 | 9 | EMTI-3030E4TP | AS | 060791 | 12 |
| 3 | 480 | 3 | 23 | 3 | 17-3/4 | EMTI-3030 | AS | 091897 | 6 | EMTI-3030E2 | AS | 033304 | 9 | EMTI-3030E4TP | AS | 060804 | 12 |
| 4.5 | 240 | 3 | 23 | 3 | 24-7/8 | EMTI-3045 | AS | 091900 | 7 | EMTI-3045E2 | AS | 033312 | 10 | EMTI-3045E4TP | AS | 060839 | 13 |
| 4.5 | 480 | 3 | 23 | 3 | 24-7/8 | EMTI-3045 | AS | 091918 | 7 | EMTI-3045E2 | AS | 033320 | 10 | EMTI-3045E4TP | AS | 060847 | 13 |
| 6 | 240 | 3 | 23 | 3 | 32-7/16 | EMTI-3060 | AS | 091926 | 9 | EMTI-3060E2 | AS | 033339 | 12 | EMTI-3060E4TP | AS | 060898 | 15 |
| 6 | 480 | 3 | 23 | 3 | 32-7/16 | EMTI-3060 | AS | 091934 | 9 | EMTI-3060E2 | AS | 033347 | 12 | EMTI-3060E4TP | AS | 060900 | 15 |
| 7.5 | 240 | 3 | 23 | 3 | 40-3/8 | EMTI-3075 | AS | 091942 | 10 | EMTI-3075E2 | AS | 033355 | 13 | EMTI-3075E4TP | AS | 060935 | 16 |
| 7.5 | 480 | 3 | 23 | 3 | 40-3/8 | EMTI-3075 | AS | 091950 | 10 | EMTI-3075E2 | AS | 033363 | 13 | EMTI-3075E4TP | AS | 060943 | 16 |
| 9 | 240 | 3 | 23 | 3 | 47-7/8 | EMTI-3090 | AS | 091969 | 12 | EMTI-3090E2 | AS | 033371 | 15 | EMTI-3090E4TP | AS | 060951 | 18 |
| 9 | 480 | 3 | 23 | 3 | 47-7/8 | EMTI-3090 | AS | 091977 | 12 | EMTI-3090E2 | AS | 033380 | 15 | EMTI-3090E4TP | AS | 060960 | 18 |

**Stock Status:** **S** = stock AS = assembly stock NS = non-stock
**To Order—**Specify model, volts, phase, kW, PCN and quantity.

1. Heaters with General Purpose Enclosures are UL Listed and CSA Certified.
2. Heaters with Moisture Resistant/Explosion Resistant Enclosures are CSA NRTL/C Certified.

FASTShip™
Same-day shipping on stock item orders received before 4 pm CST.
3-day shipping on assembly-stock items.